PRODUCT SERIES:

7200 HORIZONTAL ROLLER

WOOD FRAME INSTALLATION

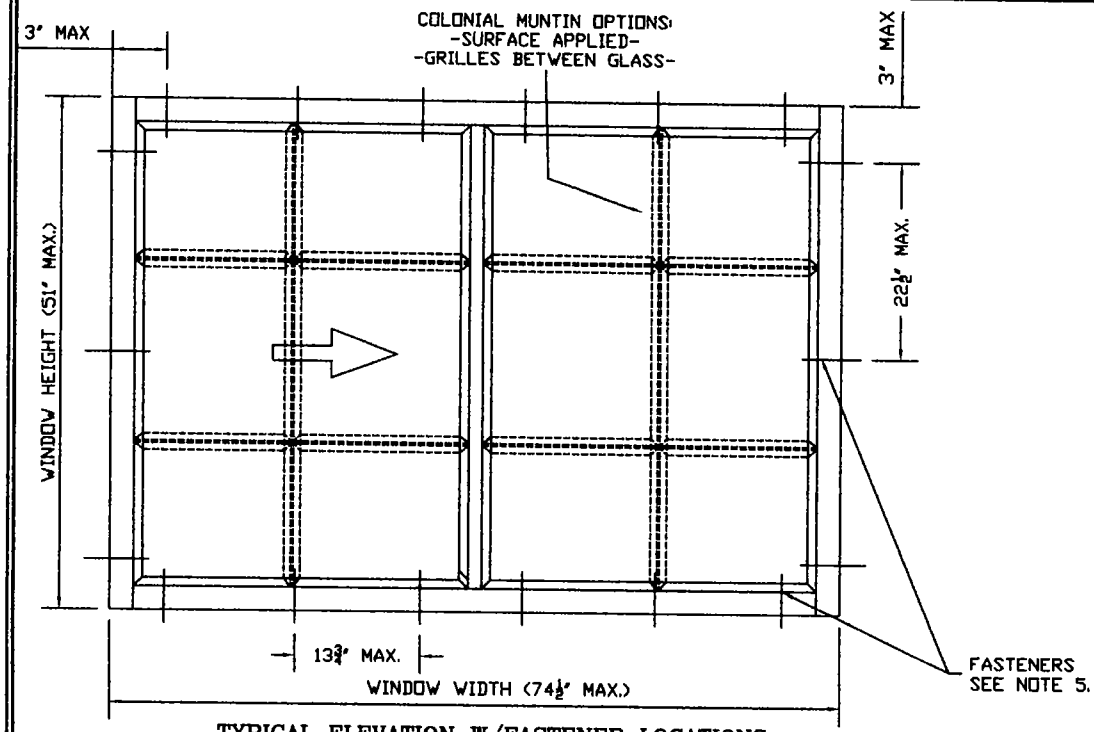

TYPICAL ELEVATION W/FASTENER LOCATIONS

NOTE: THIS WINDOW COMES IN A XO, OX & XOX CONFIGURATIONS.

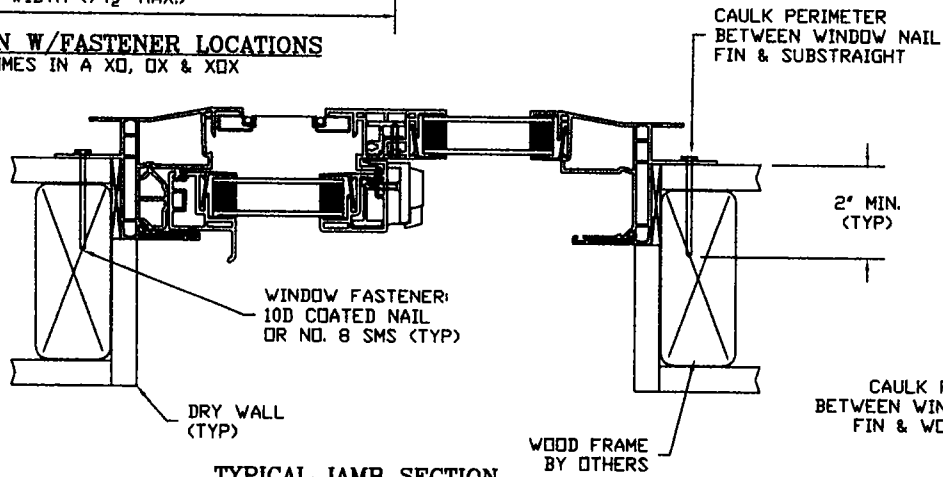

TYPICAL JAMB SECTION

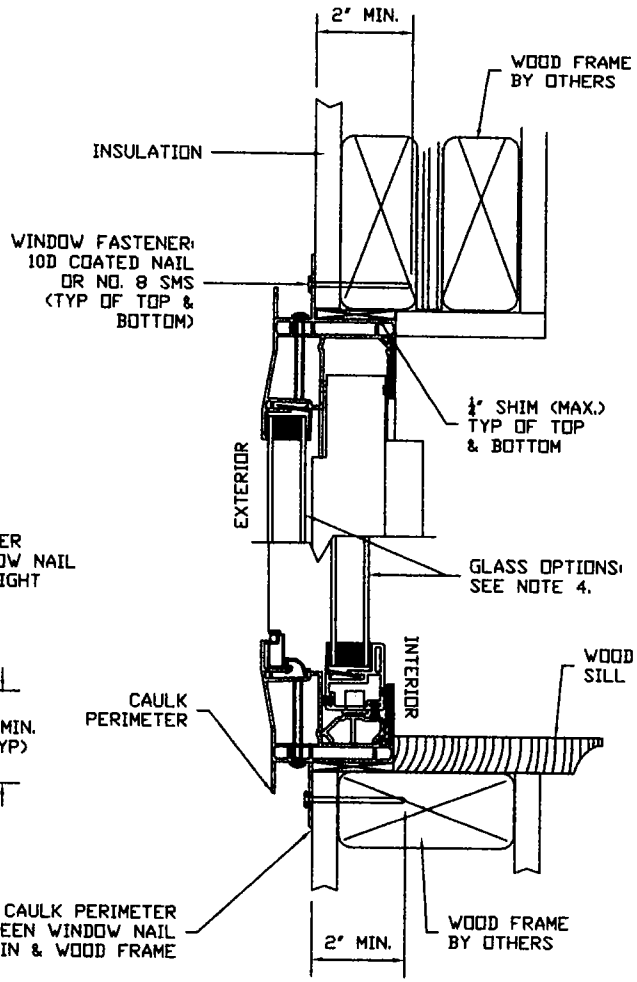

ELEVATION SECTION (TYP)

WINDOW INSTALLATION NOTES:

1. STRUCTURAL DESIGN LOAD/RATING: 30 PSF/HS-R30
2. CERTIFIED WINDOW TEST: CTLA-886W
3. FRAME: PVC/FIN TYP
4. GLASS: SINGLE PANE & INSULATED
5. FASTENERS: 304 SS OR COATED FOR CORROSION RESISTANCE.
6. GLAZING: INTERIOR GLAZED W/ADHESIVE BACK-BEDDING & SNAP IN EXTRUDED RIGID PVC GLAZE BEAD
7. WINDOW SEALANTS: COMPLY W/AAMA 800-92 OR EQUIVALENT.
8. STATE & LOCAL BLDG. CODES: CONFORMANCE IS SOLE RESPONSIBILITY OF THE ARCHITECT, BLDG. OWNER OR CONTRACTOR.

Douglas Preston
3-31-3

SEASONSHIELD INC. DRAWING NUMBER	SHEET NUMBER	Engineering Approvals:	***** Note *****	Date: 03/02/02
72W	1 of 1	Douglas Preston, PE FL License No. 53291 11531 Wellman Dr. Riverview, FL 33569 (813.689.9418)	PE certification is for structural loads only.	Scale: N.T.S. Drawn By: N.G.H.

SEASONSHIELD INCORPORATED