PRODUCT SERIES:

# 6500 IMPACT HORIZ. ROLLER

## MASONRY INSTALLATION

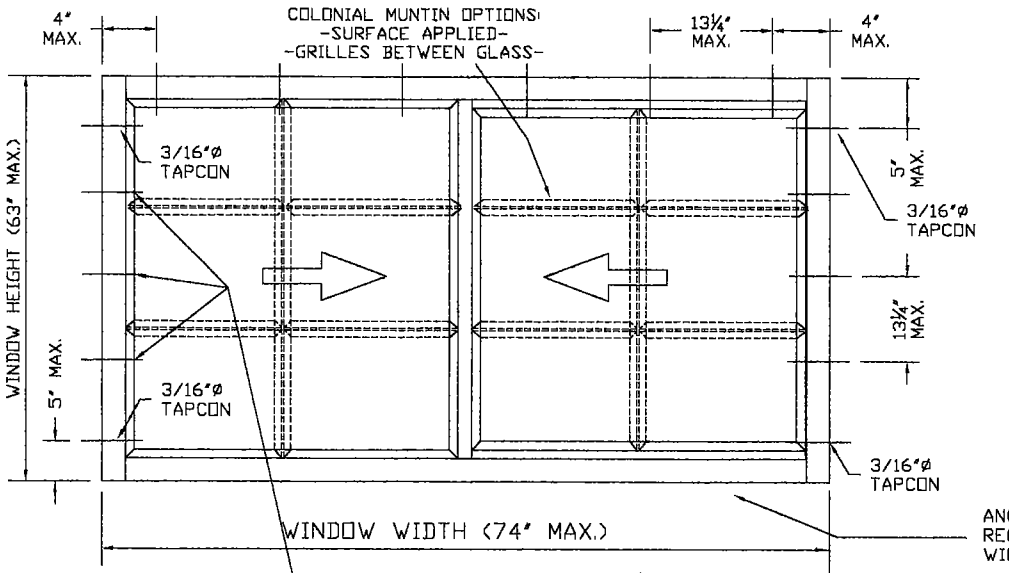


TYPICAL ELEVATION W/FASTENER LOCATIONS

NOTE: THIS WINDOW IS AVAILABLE AS AN XO OX & XX VERSION. VERSION SHOWN IS A XOX. VERSION TESTED WAS A XX.

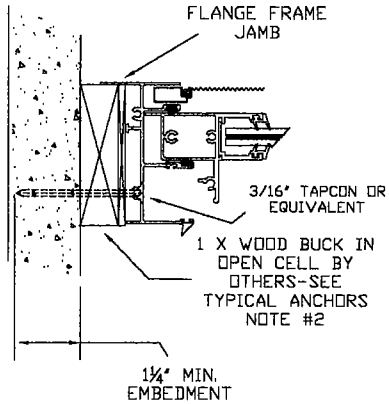


1 x BUCK JAMB SECTION (TYP)

NOTE: CAULK BETW. BUCK & MASONRY, FLG & BUCK & WINDOW PERIMETER.

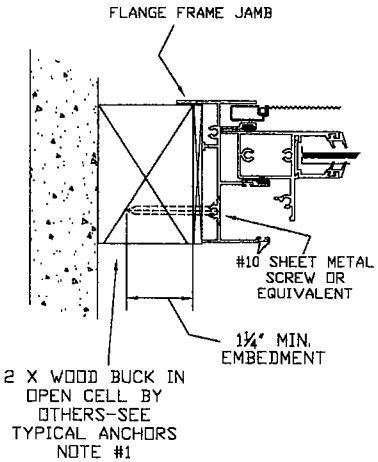


2 x BUCK JAMB SECTION (TYP)

NOTE: CAULK BETW. BUCK & MASONRY, FLG & BUCK & WINDOW PERIMETER.

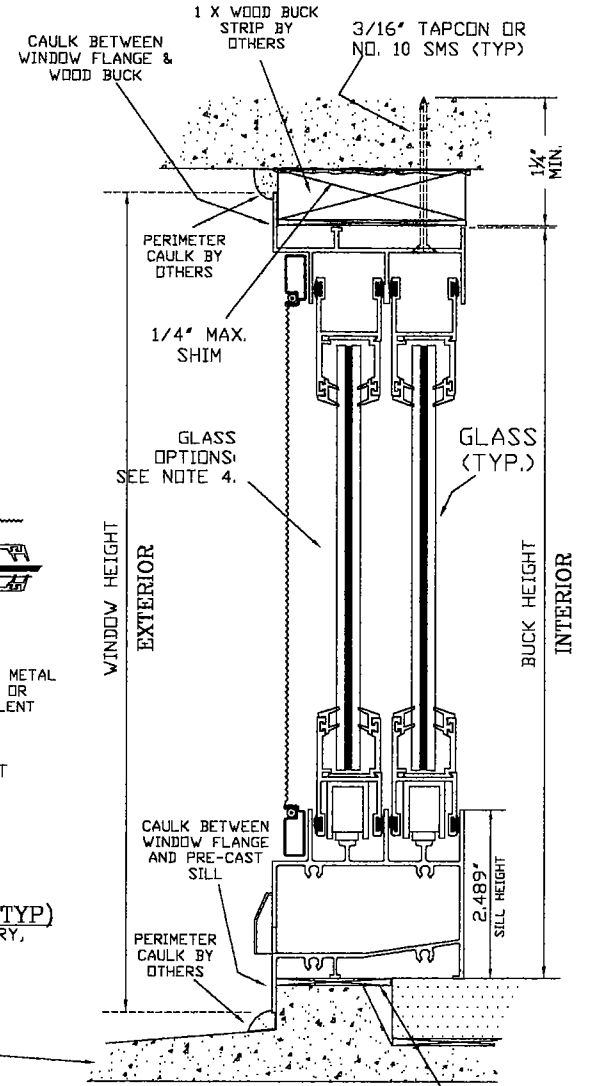


ELEVATION SECTION (TYP)

WINDOW INSTALLATION NOTES:

1. DESIGN STRUCTURAL LOADS/RATING: 60 PSF/C-60
2. CERTIFIED TEST REPORT: FTL 01.0328.01/FILE 02-033
3. FRAME: 6063-T6 ALUMINUM/FLANGE TYP
4. GLASS: SINGLE PANE & INSULATED
5. FASTENERS: 304 SS OR COATED FOR CORROSION RESISTANCE.
6. GLAZING: CHANNEL (MARINE) GLAZED WITH A FLEXIBLE VINYL GLAZING BEAD FOR BOTH MONOLITHIC GLASS AND INSULATED GLASS. GLAZING BITE = .625" TYPICAL
7. WINDOW SEALANTS: COMPLY W/AAMA 800-92 OR EQUIVALENT.
8. WINDOW WOOD BUCKS: STRUCTURAL INTEGRITY & ATTACHEMENT TO THE WINDOW OPENING IS THE SOLE RESPONSIBILITY OF THE OWNER, ENGINEER, OR THE CONTRACTOR.
9. STATE & LOCAL BLDG. CODES: CONFORMANCE IS SOLE RESPONSIBILITY OF THE ARCHITECT, BLDG. OWNER OR CONTRACTOR.

Douglas Preston
3-31-3

| SEASONSHIELD INC. DRAWING NUMBER | SHEET NUMBER | Engineering Approvals: | ***** Note ***** | Date: 03/02/02 |
|---|---|---|---|---|
| 65MI | 1 of 1 | Douglas Preston, PE<br>FL License No. 53291<br>11531 Wellman Dr.<br>Riverview, FL 33569 (813.689.9418) | P.E. certification is for structural loads only. | Scale: N.T.S.<br>Drawn By: N.G.H. |

SEASONSHIELD® INCORPORATED