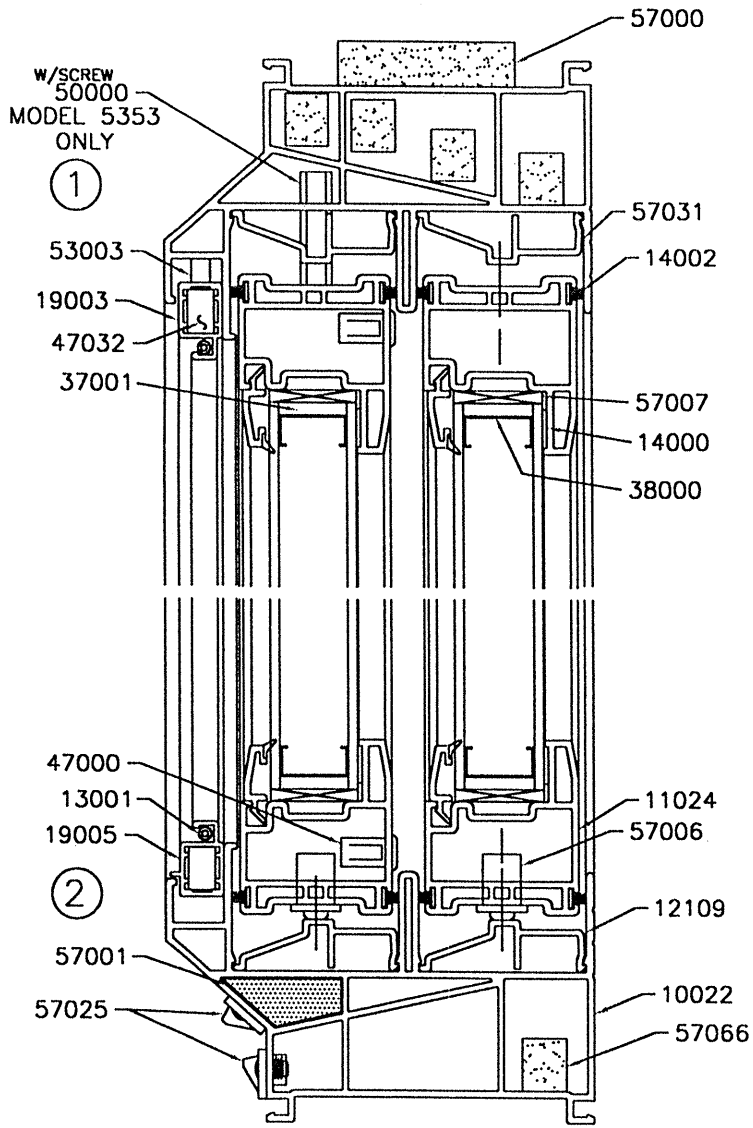

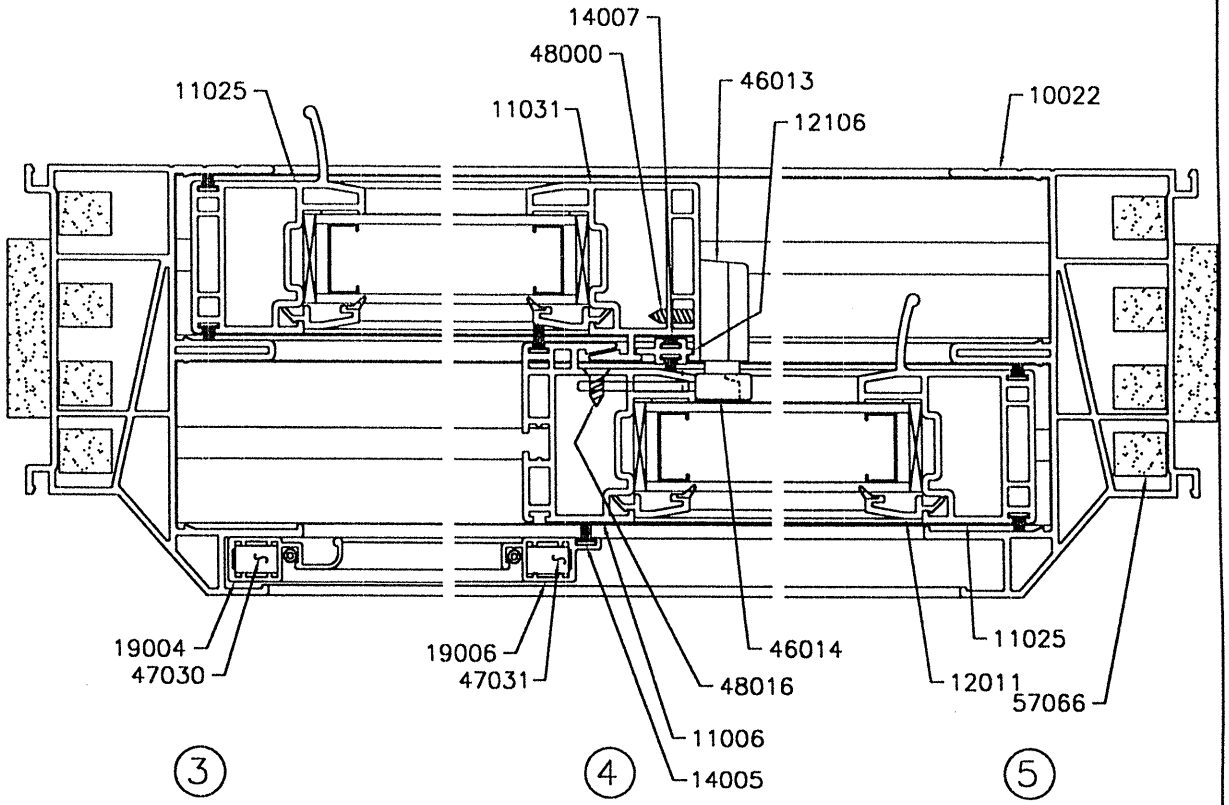

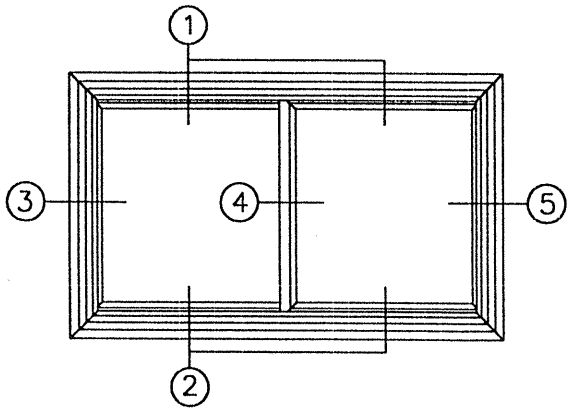

EXTERIOR ELEVATION

LAYER NOTES:
HARDWARE DETAILS & PARTS IDENTIFICATION ON "HDWE" LAYER.
FORMULAS ON "1" LAYER.

Gorell
CUSTOM WINDOWS & DOORS
GORELL ENTERPRISES, INC.
1380 WAYNE AVENUE INDIANA PA 15701

GORELL ENTERPRISES,INC.
1380 Wayne Avenue Indiana, PA 15701

SCALE FULL		REVISIONS
DATE 1/25/01		
DWN VSN		
TITLE MODEL 5352		DWG. NO.
2 LITE LIFT OUT SLIDER		5352